USER MANUAL FOR THE Optimax™

APOGEE TRAILERS

This user manual is updated regularly. The most recent version is available at www.apogeetrailers.com

Customer: Apogee Trailers	Date/Revision	Approved
Description: User manual for a trailer	March 1 26/10/2020	100%
Title: “ “		Colour(s)
Publication: ...		4c
Format: 4.5x5.5 inches Sébastien Neveu / Tel. 514 268-1297		

THANK YOU FOR CHOOSING APOGEE

Apogee is a company based on innovation and excellence, which aims to bring to market products that stand out. We aim to redefine the standard of excellence of the utility trailer with Optimax™, unique trailers that will satisfy you. We make every effort to serve our customers the best with our motto always in mind, **AIM FOR THE TOP!**

APOGEE TRAILERS

Apogee trailers
519 –103, Rue J Oswald Forest
Saint-Roch-de-l'Achigan,
(Quebec) J0K 3H0
450.588.3845
Monday to Friday: 8:30 am - 5:00 pm

CONTENTS

Important information 4

Specification 5

Storage (Closing) 6

1. Closing the rear section 7

2. Closing the front section 11

Unfolding the trailer 15

1. Hitch extender and opening the front section 15

2. Opening the rear section 18

Loading/unloading methods 20

Using the tailgate as a ramp 20

Tipping 21

Towing 22

Load distribution 22

General maintenance 23

Warranty information 24

IMPORTANT INFORMATION

If you suffer from a bad back, joint pains or have any other physical condition which effects your ability to handle heavy loads, we strongly recommend you do not use this trailer.

In this manual, the level of risk of a potential hazard is indicated as follows:

WARNING:

Indicates a hazardous situation which if not avoided could result in death or serious injury.

CAUTION:

Indicates a hazardous situation which if not avoided could result in moderate or minor injury.

OBSERVATION:

Indicates a hazardous situation which if not avoided could result in damage to property.

SPECIFICATION:

Trailer without brake system

Trailer class: Class 1

Tire: 5.30-12

Pressure: 550 kPa (80 psi) max

Wheel torque: 75 N.m (55 ft-lb)

CAUTION:

Wheel, tire or lugnut failure can cause trailer to lose control. Before towing, you must inspect: Tire air pressure and tire thread, tires and wheels for damage, lugnuts for tightness. For new and remounted wheels, inspect tires and lug nuts every 10, 25 and 50 miles.

This product comes with a limited warranty. This warranty will be void if product is damaged due to negligence, abuse, misuse, accident, modification, tampering, alteration, faulty installation and/or acts of God. Please refer to the warranty section at the end of this user manual.

TIRE AND LOADING INFORMATION

The weight of cargo should never exceed 725 kg or 1,600 lbs.
Please see appendix page 26 for more complete information about tire safety

TIRE	SIZE	COLD TIRE PRESSURE	SEE OWNERS MANUAL FOR ADDITIONAL INFORMATION
FRONT	5,30-12 (C)	550 KPA (80 PSI/LPC)	
REAR	5,30-12 (C)	550 KPA (80 PSI/LPC)	
SPARE	5,30-12 (C)	550 KPA (80 PSI/LPC)	

Model	Inside dimensions (in)	Inside dimensions (cm)	Overall width (in/cm)	Mass (lbs/kg)	GVWR (lbs/kg)	Load capacity (lbs/kg)
Adapt-X Optimax	49.5 x 98.5	125.7 x 250.2	71.5/181.6	325/147	1,984/900	1,659/753

STORAGE (CLOSING)

To securely close your Optimax™ trailer and avoid any damages to it, please carefully follow the instructions below.

OBSERVATION:

First close the rear section then the front section.
The closing operations must be performed on a flat surface.

1. HITCH PINS

Remove both hitch pins from the front section and both hitch pins from the rear section. **Fig. 2 and Fig.3**

Figure 1: Please ensure the trailer cannot move by unintentionally (for example, by using wheel blocks) at the front and at the back of the wheels.

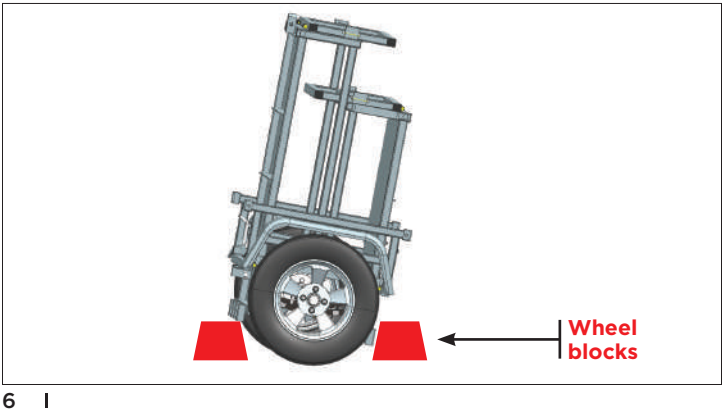

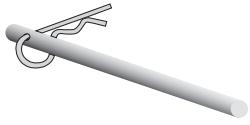

Pin correct positioning

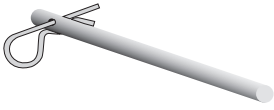

Pin improper positioning

2. CLOSING THE REAR SECTION

To close the rear section follow the instructions below. If necessary, consult **Figures 3** to **7**.

2.1. Standing behind the trailer, check if the hitch pins in the tailgate are in position then lift up the rear section.
Fig. 2, **Fig. 4** and **Fig. 5**

Figure 2: Remove the hitch pin

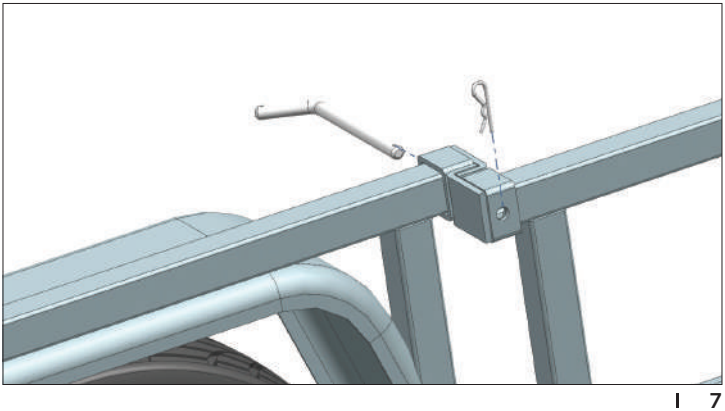

CAUTION:

If the tailgate pins are not in position, the tailgate may open when you attempt to lift up the rear section.

2.4. Put the hitch pins in their corresponding storage location.
Fig. 6 and **Fig. 7**

WARNING:

Always check that the hitch pins are in their proper position when the trailer is in the closed or open position.

Figure 3: Rear section

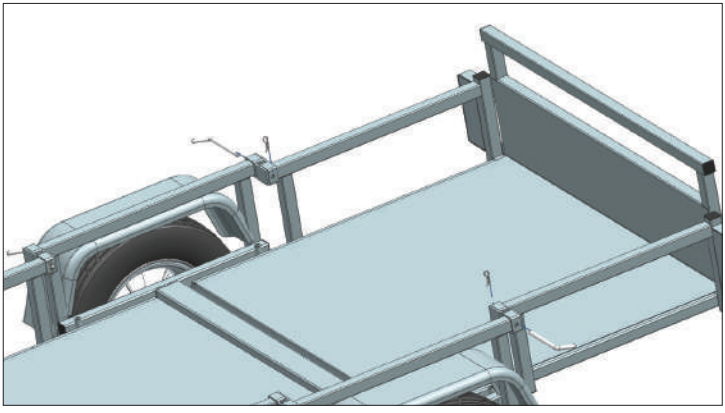

Figure 4: Lift up the rear section

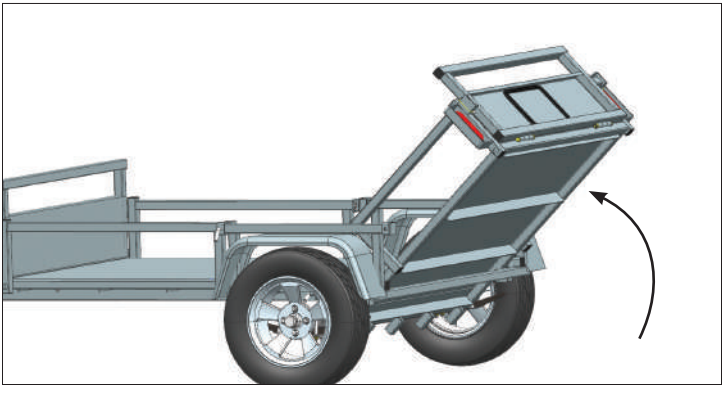

Figure 5: Close the rear section

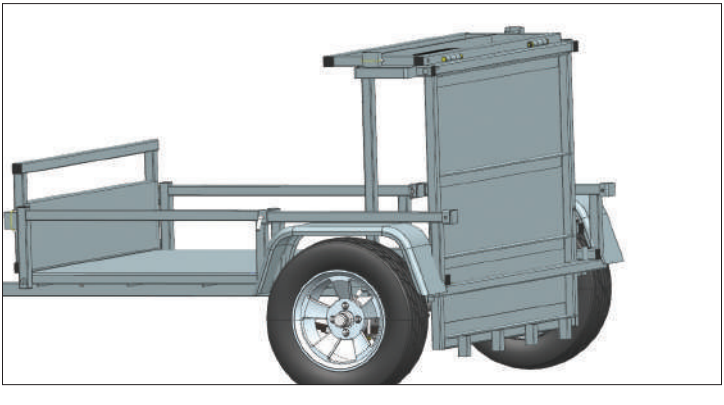

Figure 6: Storage location for hitch pins when in the closed position

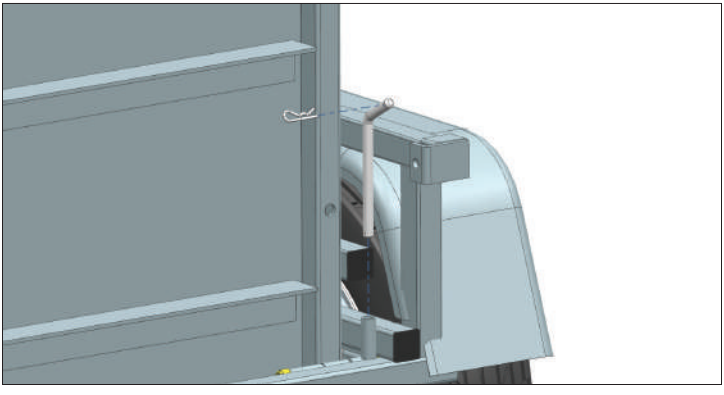

Figure 7: Storage location for hitch pins when in the closed position (continued)

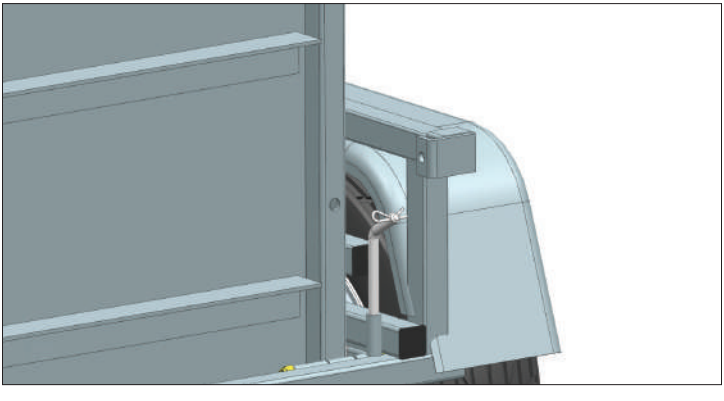

3. CLOSING THE FRONT SECTION

To close the front section follow the instructions below. If necessary, consult **Figures 8** to **15**.

3.1. Remove the hitch pins from the front section. **Fig. 2**

3.2. Open the anti-vibration latch, unlock then remove the tipping pin. **Fig. 8**

3.3. Disconnect the electrical wiring harness between the front section and the tongue.

OBSERVATION:

Not disconnecting the electrical wiring harness between the front section and the tongue before closing the front section of the trailer could damage the harness.

CAUTION:

If the tailgate pins are not in position, the tailgate may open when you attempt to lift up the front section.

3.4. Put one foot on the tongue then lift and close the front section. **Fig. 9** and **Fig. 10**

3.5. As when closing the rear section, put the hitch pins in their corresponding storage location. **Fig. 11**

3.6. Tip the trailer onto the stops of the rear section. This removes the weight of the trailer from the tongue making it easier to remove the tongue pin. **Fig. 12**

3.9. Unlock then remove the tongue pin. **Fig. 13**

3.10. In order not to lose the tipping pin and tongue pin, put them back into their corresponding positions on the trailer.

WARNING:

Always check that the hitch pins are in their proper position when the trailer is in the closed or open position.

Figure 8: Remove the Tipping pin

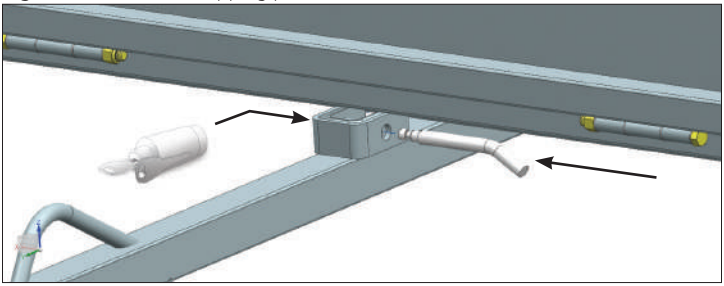

Figure 9: Lift up the front section

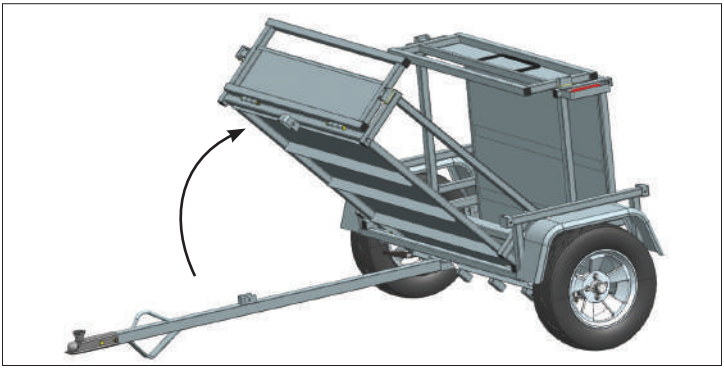

Figure 10: Close the front section

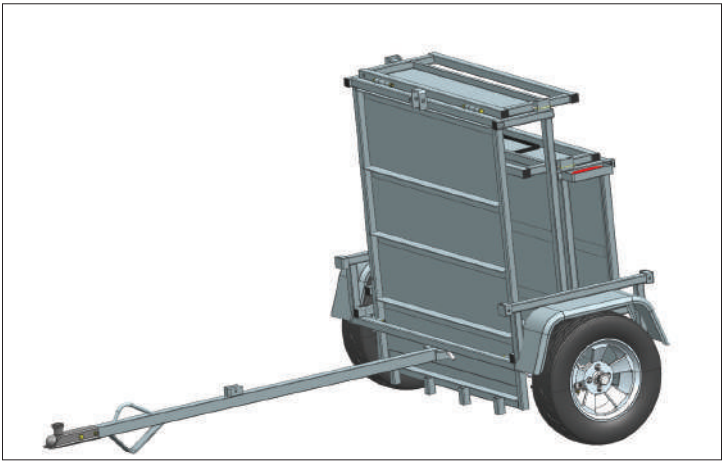

Figure 11: Storage location for hitch pins when in the locked position

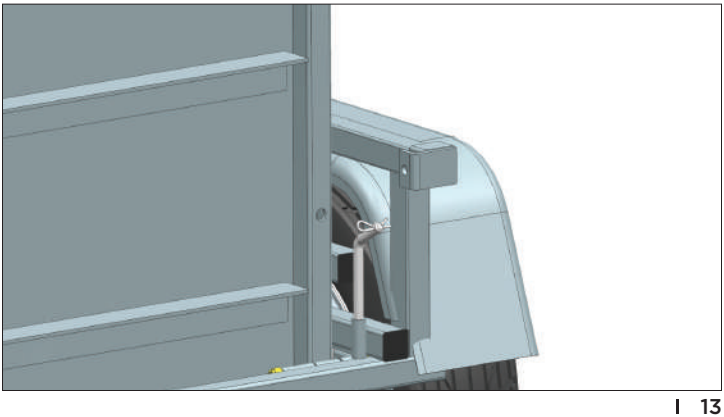

Figure 12: Tip the trailer onto the stops of the rear section

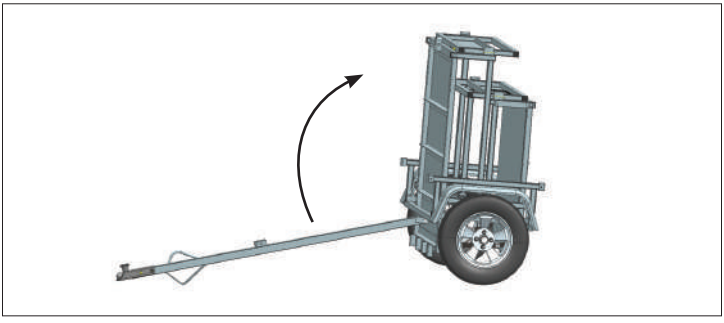

Figure 13: Remove the tongue pin

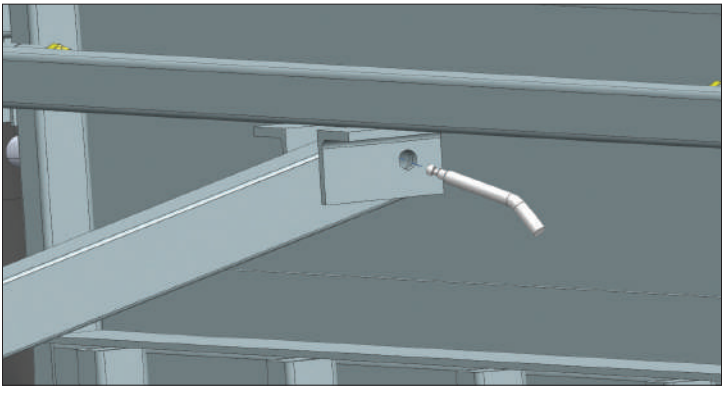

CAUTION:

Be careful if you have to move the trailer when it is in the locked position because it could tip over.

UNFOLDING THE TRAILER

To securely open your **Optimax™** trailer and avoid any damages to it, please carefully follow the instructions below.

OBSERVATION:

First you must attach the tongue, raise the front support leg of the front section, open the front section, raise the rear support leg of the rear section, then open the rear section. The unfolding operations must be performed on a flat surface.

1. TONGUE AND OPENING THE FRONT SECTION

To open the front section follow the instructions below. If necessary, consult **Fig. 8** and **Figures 14** to **31**.
Before opening the trailer, check to see if all the hitch pins are in position and that the trailer is tipped onto its rear support leg of its rear section. **Fig. 14**

1.1. Attach the tongue to the main body of the trailer by inserting it into its corresponding section. Put the tongue pin in the corresponding pin holes. **Fig. 10** and **Fig. 20**

1.2. Lock the pin and ensure it is safely locked and can not come out by itself. **Fig. 21**

WARNING:

It is imperative that the tongue lock pins are secured in place and fully locked. Make sure to double-check this step to confirm that the pins are properly locked

CAUTION:

If the tongue is not attached and you attempt to use the front section the trailer could tip over toward the front.

1.3. Remove the tipping pin and the hitch pins from the front section.

1.4. Check that the tailgate pins are in position.

CAUTION:

If the tailgate pins are not in position, the tailgate may open when you attempt to close the front section.

1.5. Stand in front of the trailer and unfold the front section.

1.6. Lock the pin and ensure it is safely locked and can not come out by itself. Close the anti-vibration latch. **Fig. 8**

1. . Connect the electrical wiring harness between the front section and the tongue.

Figure 14: Trailer tipped onto its rear support leg

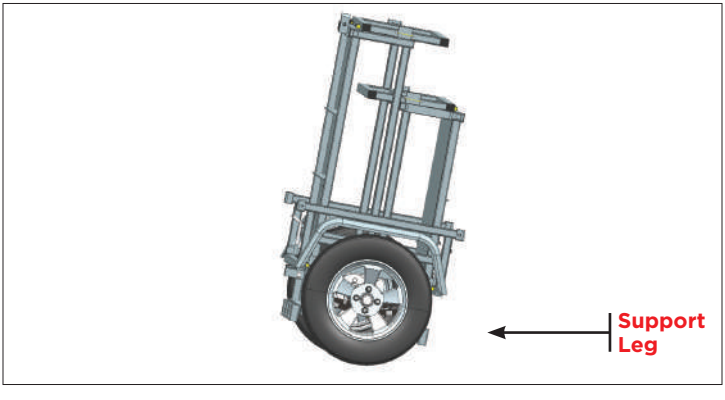

Figure 15: Tongue attached to the trailer

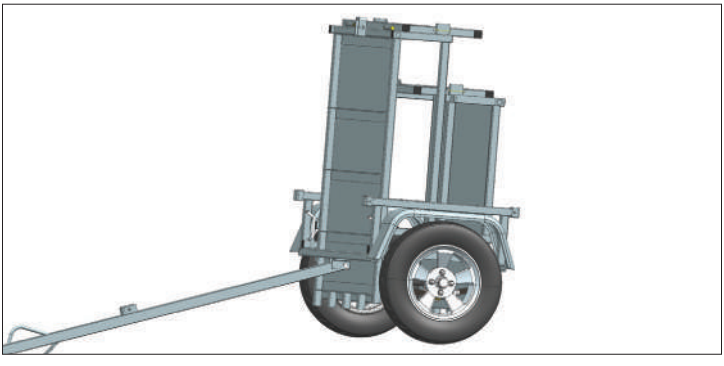

Figure 16: Unfolded front section

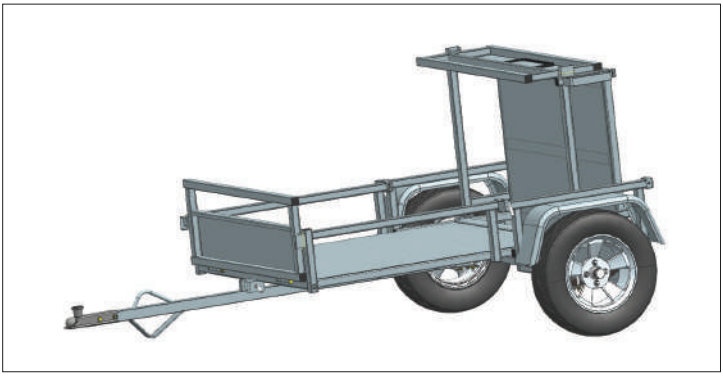

OBSERVATION:

Cotter pins must be fully inserted in the pin hole to ensure the optimal safety of the pin.

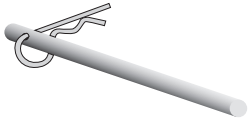

Pin correct positioning

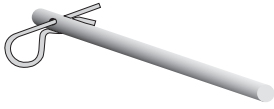

Pin improper positioning

2. OPENING THE REAR SECTION

To open the rear section follow the instructions below. If necessary, consult **Figures 11** and **16** to **19**.

2.1. Remove the hitch pins from the rear section.

2.2. Check that the tailgate pins are in position. **Fig. 17**

CAUTION:

If the tailgate pins are not in position, the tailgate could open when you attempt to open the rear section.

2.3. Stand behind the trailer and unfold the rear section. **Fig. 18**

2.4. Put back the two hitch pins from the front section and the two hitch pins from the rear section.

2.5. The trailer is now ready to be used. **Fig. 19**

Figure 17: Tailgate pins

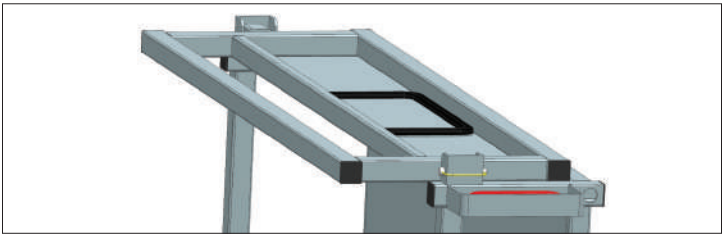

Figure 18: Opening the rear section

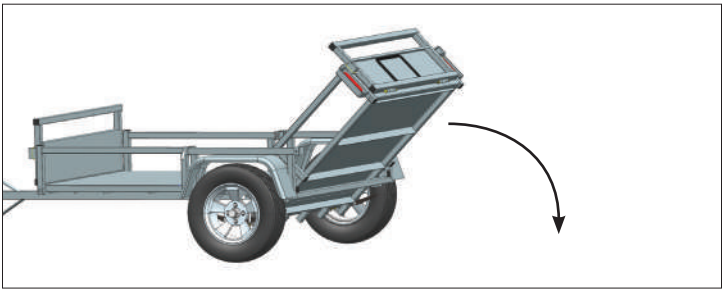

Figure 19: Trailer unfolded with hitch pins in position

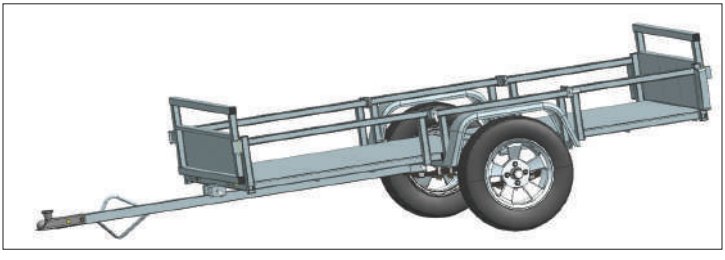

The trailer is now ready to use.

EXTENDING THE FLOOR OF THE TRAILER

Opening of the front and rear panels

The front and rear panels can be opened in order to extend the floor of the trailer.

1.1. Take out the cutter pins and pull the latchs of the panel you wish to open.
1.2. Open the panel. **Fig. 20**
1.3. The strength required to close a latch can be adjusted by rotating the latch around its thread.

Figure 20: Trailer with opened panels

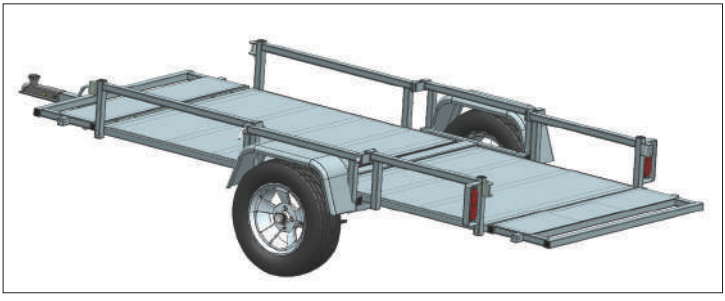

TIPPING

The trailer can also be used in a tipping position as illustrated in **Figure 21**.

OBSERVATION:

Remember to disconnect the electrical wiring harness between the front section and the tongue when using the trailer in the tipping position.

1.1. Remove the tipping pin ensuring you keep hold of the front section because the trailer will begin to tip toward the rear. **Fig. 7**

Figure 21: Trailer in tipping position

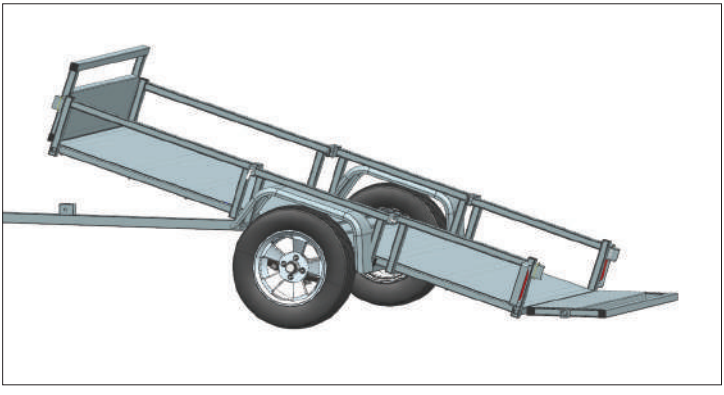

TOWING

Apogee Trailers uses a two-inch coupler (2", 5.08 cm)

Check that the size of the trailer ball of the towing vehicle is the same size as the coupler. To attach your trailer follow the instructions below.

1. Open the clamping device on the coupler and attach the trailer to it.
2. Close the clamping device and insert a locking pin or padlock in the corresponding pin hole.
3. Fit the safety chains in a criss-cross formation.
4. Connect the electrical wiring harness of the trailer to the electrical wiring of the towing vehicle and check that the trailer lights work.
5. Check that the safety chains do not restrict the trailer from moving freely.
6. Check that the safety chains are not touching the ground.

CAUTION:

The trailer may detach from the towing vehicle if the towing vehicle's trailer ball is not the same size as the coupler.

LOAD DISTRIBUTION

When loading the trailer it is important to distribute the load. To do this, check that the weight on the trailer ball is not too small (risk of jackknifing), or too heavy (restricted by the capacity of the hitch and the towing vehicle). This weight must be approximately 10% of the load and must not exceed 15%.

CAUTION:

When towing a loaded trailer remember that braking distances are significantly greater and that driving at higher speeds increases the risk of jackknifing.

GENERAL MAINTENANCE

- Grease the wheel bearings on an annual basis. For a safe and proper execution, it is recommended that this operation be executed by a certified mechanic. Otherwise, it is imperative that you consult and follow the axel manufacturer's instructions and recommendations.
- Check that the coupler is correctly secured to the trailer ball and ensure they are the same size.
- Check that the hub caps have not moved.
- Check that the safety chains are criss-crossed under the hitch extender and securely fixed to the vehicle.
- Check that all the lights are working properly.
- Ensure that the tire pressure corresponds to the tire pressure recommended by the manufacturer. Please refer to the "Tire and Loading Information" sticker located on the left hand-side of the trailer, at the front
- After the initial use of the trailer, check that the wheel bolts are securely tightened. Then, make sure you check the tightening of the wheel bolts on a regular basis, ideally after each use.
- Observe the specified standard for the load capacity.

OBSERVATION:

Only use water and soap if necessary to clean the trailer.

WARRANTY INFORMATION

Apogee Trailers offers a limited warranty of ninety (90) days from the date of purchase to the original purchaser, including parts and labour on the entire trailer. This warranty is not transferable.

Apogee Trailers offers a warranty of two (2) years from the date of purchase on the aluminium frame which includes any damages to the frame, welding defects or electrical wiring faults subject to normal use of the trailer.

Apogee Trailers reserves the right to carry out a full inspection of the product so as to assess and deem if the product has been misused or if the purchaser has subjected the product to improper use.

EXCLUSIONS

The following parts are held directly under the warranty of the manufacturer and not under the Apogee Trailer warranty: The axles, tires, wheel rims, coupler, or any other part or piece not manufactured by Apogee trailers. Any warranty claim regarding a given trade accessory shall be directed directly to the manufacturer of this trade accessory.

The warranty is considered void if the trailer is subjected to any modification or improper use or if the trailer is used outside of what is classed as its intended normal use. This includes the use of chemical cleaning agents not suitable for aluminium. Damage caused by failure to check and torque lug nuts properly is not covered by warranty. Normal wear items will not be replaced due to wear (items include, but are not limited to, bearings, brakes, brake linings and hinges).

Any damage caused by or attributed to any act of God whatsoever is not covered by manufacturer's warranty. Appearance issues coming from wear, deterioration and/or damage from road elements, salt, sand, weather conditions are also not covered.

Should the purchaser wish to pursue a warranty claim s/he should visit in person the dealership from which the trailer was purchased with the purchase receipt. The purchaser should allow a reasonable period of time for any repairs covered under this warranty to be made. The purchaser is responsible for any service, towing or transport costs incurred.

REPORTING SAFETY DEFECTS:

In Canada: If you believe your vehicle has a defect that could cause a crash or could cause injury or death, you should immediately inform Transport Canada in addition to notifying Apogee Trailers, 519 -103 J Oswald Forest, Saint-Roch-de-l'Achigan, QC, J0K 3H0. Phone number: (450) 588-3845. For best results, phone Transport Canada at 1-800-333-0510 or (613) 993-9851 and ask to speak to a defect investigator. Calling directly is preferred instead of posted mail or email as it enables our investigators to confirm that your information is correct, and to answer your questions accurately. When reporting a vehicle problem that may relate to safety, provide the following information: 1. Vehicle make, model, and year. 2. Owner's name, address, and daytime phone number. 3. Vehicle Identification Number (VIN) found on the driver side of the trailer. 4. Summary of the defect. Information provided by consumer is entered into the computer data bank and catalogued according to make, model, year, manufacturer, and the affected part, assembly or system. Technical staff conducts a continuous analysis of complaints and trends to determine whether an unusual number of complaints of potential safety-related problems have been received on any specific line of vehicles or tires and may open an investigation.

In USA: If you believe that your vehicle has a defect which could cause a crash or could cause injury or death, you should immediately inform the National Highway Traffic Safety Administration (NHTSA) in addition to notifying Apogee Trailers, 519 -103 J Oswald Forest, Saint-Roch-de-l'Achigan, QC, J0K 3H0. Phone number: 1 (833) 360-3845. If NHTSA receives similar complaints, it may open an investigation, and if it finds that a safety defect exist in a group of vehicles, it may order a recall and remedy campaign. However, NHTSA cannot become involved in individual problems between you, your dealer, or Apogee Trailers. To contact NHTSA, you may call the Vehicle Safety Hotline toll-free at 1-888-327-4236 (TTY: 1-800-424-9153); go to http://nhtsa. safercar.gov; or write to: administrator, NHTSA, 1200 New Jersey Avenue SE, Washington, DC 20590. You can also obtain other information about motor vehicle safety from http://www.safercar.gov

APPENDIX: TIRE SAFETY

Studies of tire safety show that maintaining proper tire pressure, observing tire and vehicle load limits
(not carrying more weight in your vehicle than your tires or vehicle can safely handle), avoiding road hazards, and inspecting tires for cuts, slashes, and other irregularities are the most important things you can do to avoid tire failure, such as tread separation or blowout and flat tires. These actions, along with other care and maintenance activities, can also:

- Improve vehicle handling
- Help protect youandothers from avoidable break- downs andaccidents
- Improve fuel economy
- Increasethe life of your tires.

This booklet presents a comprehensive overview of tire safety, including information on the following topics:

- Basic tire maintenance
- UniformTire Quality GradingSystem
- Fundamental characteristicsof tires
- Tiresafety tips.

Use this information to make tire safety a regular part of your vehicle maintenance routine.
Recognize that the time you spend is minimal compared with the inconvenience and safety consequences of a flat tire or other tire failure.

Safety First–Basic Tire Maintenance

Properly maintained tires improve the steering, stopping, traction, and load-carrying capability of your vehicle. Underinflated tires and overloaded

vehicles are a major cause of tire failure. Therefore, as mentioned above, to avoid flat tires and other types of tire failure, you should maintain proper tire pressure, observe tire and vehicle load limits, avoid road hazards, and regularly inspect your tires.

Finding Your Vehicle's Recommended Tire Pressure and Load Limits

Tire information placards and vehicle certification labels contain information on tires and load limits. These labels indicate the vehicle manufacturer's information including:

- Recommended tire size
- Recommended tire inflation pressure
- Vehicle capacity weight (VCW–the maximum occupant andcargo weight a vehicle isdesigned to carry)
- Front and rear grossaxle weight ratings (GAWR– the maximum weight the axle systemsare designed to carry).

Both placards and certification labels are permanently attached to the vehicle door edge, door post, glove-box door, or inside of the trunk lid. You can also find the recommended tire pressure and load limit for your vehicle in the vehicle owner's manual.

Understanding Tire Pressure and Load Limits

Tire inflation pressure is the level of air in the tire that provides it with load-carrying capacity and affects the overall performance of the vehicle. The tire inflation pressure is a number that indicates the amount of air pressure– measured in pounds per square inch (psi)–a tire

requires to be properly inflated. (You will also find this number on the vehicle information placard expressed in kilopascals (kPa), which is the metric measure used internationally.)

Manufacturers of passenger vehicles and light trucks determine this number based on the vehicle's design load limit, that is, the greatest amount of weight a vehicle can safely carry and the vehicle's tire size.The proper tire pressure for your vehicle is referred to as the " recommended cold inflation pressure. " (As you will read below, it is difficult to obtain the recommended tire pressure if your tires are not cold.)

Because tires are designed to be used on more than one type of vehicle, tire manufacturers list the " maximum permissible inflation pressure" on the tire side-wall. This number is the greatest amount of air pressure that should ever be put in the tire under normal driving conditions.

Remember, however, that the vehicle manufacturer, not the tire manufacturer, determines the correct tire pressure for the tires on your vehicle

Checking Tire Pressure

It is important to check your vehicle's tire pressure at least once a month for the following reasons:

- Most tiresmaynaturally loseair over time.
- Tirescan loseair suddenly if youdrive over a pothole or other object or if you strike the curb when parking.
- With radial tires, it is usually not possible to determine underinflation by visual inspection.

For convenience, purchase a tire pressure gauge to keep in your vehicle. Gauges can be purchased at tire dealerships, auto supply stores, and other retail outlets.

The recommended tire inflation pressure that vehicle manufacturers provide reflects the proper psi when a tire is cold. The term cold does not relate to the outside temperature. Rather, a cold tire is one that has not been driven on for at least three hours. When you drive, your tires get warmer, causing the air pressure within them to increase. Therefore, to get an accurate tire pressure reading, you must measure tire pressure when the tires are cold or compensate for the extra pressure in warm tires.

Steps for Maintaining Proper Tire Pressure

Step 1: Locate the recommended tire pressure on the vehicle's tire information placard, certification label, or in the owner's manual.

Step 2: Record the tire pressure of all tires.

Step 3: If the tire pressure is too high in anyof the tires, slowly releaseair by gently pressing on the tire valve stem with theedge of your tire gauge until you get to thecorrect pressure.

Step 4: If the tire pressure is too low, note the difference between the measured tire pressure and thecorrect tire pressure. These"missing" pounds of pressure are what you will need to add.

Step 5: At a servicestation, add the missing pounds of air pressure to each tire that is underinflated.

Step 6: Check all the tires to make sure they have the sameair pressure (except in casesin which the front and rear tiresare supposed to have different amounts of pressure).

If you have been driving your vehicle and think that a tire is underinflated, fill it to the recommended cold inflation pressure indicated on your vehicle's tire information placard or certification label. While your tire may still be slightly underinflated due to the extra pounds of pressure in the warm tire, it is safer to drive with air pressure that is slightly lower than the vehicle manufacturer's recommended cold inflation pressure than to drive with a significantly underinflated tire. Since this is a temporary fix, don't forget to recheck and adjust the tire's pressure when you can obtain a cold reading.

Tire Size

To maintain tire safety, purchase new tires that are the same size as the vehicle's original tires or another size recommended by the manufacturer. Look at the tire information placard, the owner's manual, or the sidewall of the tire you are replacing to find this information. If you have any doubt about the correct size to choose, consult with the tire dealer.

Tire Tread

The tire tread provides the gripping action and traction that prevent your vehicle from slipping or sliding, especially when the road is wet or icy. In general, tires are not safe and should be replaced when the tread is worn down to 1/16 of an inch. Tires have built-in treadwear indicators that let you know when it is time to replace your tires. These indicators are raised sections spaced intermittently in the bottom of the tread grooves. When they appear "even " with the outside of the tread, it is time to replace your tires. Another method for checking tread depth is to place a penny in the tread with Lincoln's head upside down and facing you. If you can see the top of Lincoln's head, you are ready for new tires.

Tire Balance and Wheel Alignment

To avoid vibration or shaking of the vehicle when a tire rotates, the tire must be properly balanced. This balance is achieved by positioning weights on the wheel to counterbalance heavy spots on the wheel-and-tire assembly. A wheel alignment adjusts the angles of the wheels so that they are positioned correctly relative to the vehicle's frame. This adjustment maximizes the life of your tires and prevents your car from veering to the right or left when driving on a straight, level road. These adjustments require special equipment and should be performed by a qualified technician.

Uniform Tire Quality Grading System (UTQGS)

To help consumers compare a passenger car tire's treadwear rate, traction performance, and temperature resistance, the federal government requires tire manufacturers to grade tires in these three areas. This grading system, known as the Uniform Tire Quality Grading System, provides guidelines for making relative comparisons when purchasing new tires. You also can use this information to inquire about the quality of tires placed on new vehicles.

Although this rating system is very helpful when buying new tires, it is not a safety rating or guarantee of how well a tire will perform or how long it will last. Other factors such as personal driving style, type of car, quality of the roads, and tire maintenance habits have a significant influence on your tire's performance and longevity.

Treadwear grades are an indication of a tire's relative wear rate. The higher the treadwear number is, the longer it should take for the tread to wear down. For example, a tire grade of 400 should wear twice as long as a tire grade of 200. Traction grades are an indication of a tire's ability to stop on wet pavement. A higher graded tire should allow you to stop your car on wet roads in a shorter distance than a tire with a lower grade. Traction is graded from highest to lowest as " AA " , " A", "B", and "C".

Temperature grades are an indication of a tire's resistance to heat. Sustained high temperature (for example, driving long distances in hot weather), can cause a tire to deteriorate, leading to blowouts and tread separation. From highest to lowest, a tire's resistance to heat is graded as " A", "B", or "C".

TIRE FUNDAMENTALS

Federal law requires tire manufacturers to place standardized information on the sidewall of all tires. This information identifies and describes the fundamental characteristics of the tire and also provides a tire identification number for safety standard certification and in case of a recall.

Information on Passenger Vehicle Tires

Please refer to the diagram below.

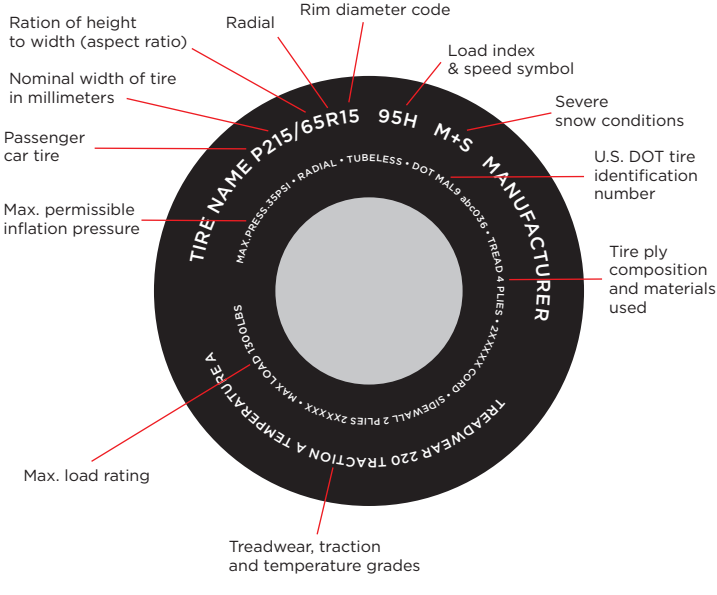

P

The “P” indicates the tire is for passenger vehicles.

Next number

This three-digit number gives the width in millimeters of the tire fromsidewall edge to sidewall edge. In general, the larger the number, the wider the tire.

Next number

This two-digit number, known as theaspect ratio, gives the tire’s ratio of height to width. Numbersof 70 or lower indicate ashort sidewall for improved steering responseandbetter overall handling on dry pavement.

R

The “R” stands for radial. Radial plyconstruction of tireshas been the industry standard for the past 20 years.

Next number

This two-digit number is the wheel or rim diameter in inches. If youchange your wheel size, you will have to purchasenew tires to match the new wheel diameter.

Next number

This two- or three-digit number is the tire’s load index. It isa measurement of how much weight each tire can support.You may find this information in your owner’s manual. If not, contact a local tire dealer. Note:You maynot find this information on all tiresbecause it is not required by law.

M+S

The “M+S” or “M/S” indicates that the tire has some mud andsnow capability. Most radial tireshave these markings; hence, they have somemud and snow capa bility.

Speed Rating

Thespeed rating denotes thespeed at which a tire is designed to be driven for extended periods of time.The ratings rangefrom 99 milesper hour (mph) to 186 mph.Theseratings are listed below. Note:You maynot find this information on all tiresbecause it is not required by law.

Q 99 mph	**H 130 mph**
R 106 mph	**V 149 mph**
S 112 mph	**W 168 mph***
T 118 mph	**Y 186 mph***
U 124 mph	

* For tireswith a maximum speed capability over 149mph, tire manufacturers sometimesuse the letters ZR. For those with a maximum speed capability over 186mph, tire manu facturers always use the letters ZR.

U.S. DOT Tire Identification Number

Thisbegins with the letters “DOT” and indicates that the tire meets all federal standards.The next two numbers or letters are the plant code where it was manufactured, and the last four numbers represent the week andyear

the tire was built. For example, the numbers 3197 means the 31st week of 1997. The other numbers are marketing codesused at the manufacturer’s discretion. This information is used to contact consumers if a tire defect requiresa recall.

Tire Ply Composition and Materials Used

The number of plies indicates the number of layers of rubber-coated fabric in the tire. In general, the greater the number of plies, themore weight a tire can support. Tire manufacturers also must indicate the materials in the tire, which include steel, nylon, polyester, andothers.

Maximum Load Rating

This number indicates the maximum load in kilograms and pounds that can be carried by the tire.

Maximum Permissible Inflation Pressure

This number is the greatest amount of air pressure that should ever be put in the tire under normal driving conditions.

UTQGS INFORMATION

Treadwear Number

This number indicates the tire's wear rate.The higher the treadwear number is, the longer it should take for the tread to wear down. For example, a tire graded 400should last twiceas longas a tire graded200.

Traction Letter

This letter indicatesa tire's ability tostop on wet pave ment. A higher gradedtire should allow you tostop your car on wet roads in ashorter distancethana tire with a lower grade.Traction isgradedfrom highest to lowest as "AA","A", "B", and "C".

Temperature Letter

This letter indicatesa tire's resistanceto heat. The temperature gradeis for a tire that is inflated properly and not overloaded. Excessive speed, underinflation or excessive loading, either separately or in combination, can causeheat build-up and possible tire failure. From highest to lowest, a tire's resistanceto heat is graded as "A", "B", or "C".

Additional Information on Light Truck Tires

Please refer to diagram below.

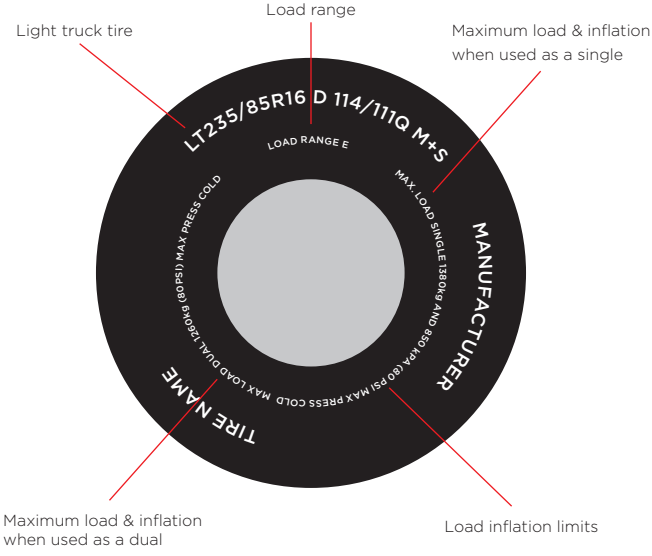

Tires for light trucks have other markings besides those foundon the side walls of passenger tires.

LT

The “LT” indicates the tire is for light trucks.

Max. Load Dual kg(lbs) at kPa(psi) Cold

This information indicates the maximum loadand tire pressure when the tire isused asa dual, that is, when four tiresare put on each rear axle (a total of six or more tireson the vehicle).

Max. Load Single kg(lbs) at kPa(psi) Cold

This information indicates the maximum loadand tire pressure when the tire isused asasingle.

Load Range

This information identifies the tire’s load-carrying capabilitiesand its inflation limits.

Snow Tires

In some heavy snow areas, local governments may require true snow tires, those with very deeply cut tread. These tires should only be used in pairs or placed on all four wheels. Make sure you purchase snow tires that are the same size and construction type as the other tires on your vehicle.

TIRE SAFETY TIPS

Preventing Tire Damage

- Slow down if you have to go over a pothole or other object in the road.
- Do not run over curbs or other foreign objects in the roadway, and try not to strike the curb when parking.

Tire Safety Checklist

☐ Check tire pressure regularly (at least once a month), including the spare.

☐ Inspect tires for uneven wear patterns on the tread, cracks, foreign objects, or other signs of wear or trauma.

☐ Remove bits of glass and other foreign objects wedged in the tread.

☐ Make sure your tire valves have valve caps.

☐ Check tire pressure before going on a long trip.

☐ Do not overload your vehicle. Check the tire information placard or owner's manual for the maximum recommended load for the vehicle.

☐ If you are towing a trailer, remember that some of the weight of the loaded trailer is transferred to the towing vehicle.

For more information, visit www.nhtsa.gov or call 1-888-327-4236

Apogee Trailers
519 –103, Rue J Oswald Forest
Saint-Roch-de-l'Achigan,
(Quebec) J0K 3H0
450.588.3845
Monday to Friday: 8:30 am - 5:00 pm